ENGINEERING EXPRESS®
E.X.P.E.R.T. (Engineering Express Product Evaluation Report)

160 SW 12TH AVE SUITE 106, DEERFIELD BEACH, FL 33442
(954) 354-0660 | ENGINEERINGEXPRESS.COM

Technical Evaluation Report

DIVISION: 23 08 00–COMMISSIONING OF HVAC

FL 26981.1-R0
THIS DOCUMENT CONTAINS (4) PAGES

EVALUATION SUBJECT: **RHEEM PACKAGED UNITS** 17-4893

REPORT HOLDER:
RHEEM MANUFACTURING COMPANY, INC.
1100 ABERNATHY ROAD SUITE 1400
ATLANTA, GA, USA
770-351-3000 | RHEEM.COM

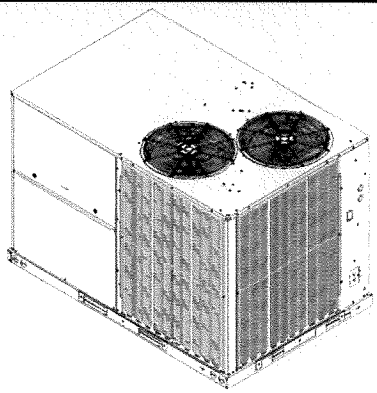

NOTE: GRAPHICAL DEPICTIONS IN THIS REPORT ARE FOR ILLUSTRATIVE PURPOSES ONLY AND MAY DIFFER IN APPEARANCE

SCOPE OF EVALUATION (compliance with the following codes):

THIS IS A STRUCTURAL (WIND) PERFORMANCE EVALUATION ONLY. NO ELECTRICAL OR COOLING PERFORMANCE RATINGS OR CERTIFICATIONS ARE OFFERED OR IMPLIED HEREIN.

This Product Evaluation Report is being issued in accordance with the requirements of the 6th Edition Florida Building Code (2017) per FBC Section 104.11, FMC 301.15, FBC Building Ch. 16, ASCE-7-10, FBC Building 1522.2, FBC Residential M1202.1, M1301.1, & FS 471.025. The product noted on this report has been tested and evaluated as summarized herein.

SUBSTANTIATING DATA:

• Product Evaluation Documents Test Reports
Substantiating documentation has been submitted to provide this TER and is summarized in the sections below.
Test Report: 0320.01-18 (American Test Lab of South FL)

• Structural Engineering Calculations
Structural engineering calculations have been prepared which evaluate the product based on comparative and/or rational analysis to qualify the following design criteria:

- Maximum allowable uplift, sliding, & overturning moment for ground and roof applications
- Maximum unit anchorage to steel curb

NOTE: No 33% increase in allowable stress has been used in the design of this product.

INSTALLATION:
The product(s) listed above shall be installed in strict compliance with this product evaluation & manufacturer-provided model specifications.
The product components shall be of the material specified in the manufacturer-provided product specifications. All screws must be installed in accordance with the applicable provisions & anchor manufacturer's published installation instructions.

LIMITATIONS & CONDITIONS OF USE:
Use of this product shall be in strict accordance with this product evaluation as noted herein. The supporting host structure shall be designed to resist all superimposed loads as determined by others on a site-specific basis as may be required by the Authority Having Jurisdiction. Host structure conditions which are not accounted for in this product's respective anchor schedule shall be designed for on a site-specific basis by a registered professional engineer. No evaluation is offered for the host supporting structure by use of this document; Adjustment factors noted herein and the applicable codes must be considered, where applicable.
All supporting components which are permanently installed shall be protected against corrosion, contamination, and other such damage at all times.

Fasteners must penetrate the supporting members such that the full length of the threaded portion is embedded within the main member.
This evaluation does not offer any evaluation to meet large missile impact debris requirements which typically are not required for this type of product.

UNIT CASING MATERIAL:
20ga galv. sheet steel ASTM A653 Type B.
Removable Top & side covers secured with #10 Sheet metal Hex Head Screws
Knockouts provided for utility & control connections.

FINISH:
Baked Enamel

INSTALLATION:
Shall follow manufacturer specifications as well as information provided herein

OPTIONS:
This evaluation is valid for models shown in the last page

STRUCTURAL PERFORMANCE:
Models referenced herein are subject to the following design limitations:

Maximum Rated Wind Pressure:

200psf Lateral 133psf Uplift

Engineer Signature & Seal:
FRANK L. BERNARDO LICENSE April 18, 2018 No PE0046549
Frank L. Bernardo, P.E., SECB
ENGINEERING EXPRESS®
PE #0046549 CA #9885
STATE OF FLORIDA PROFESSIONAL ENGINEER

SECTION 2 PRODUCT INSTALLATION

GROUND MOUNT APPLICATIONS
CONFIGURATION A
Note: Design & installation of ground host is by others per site specific conditions

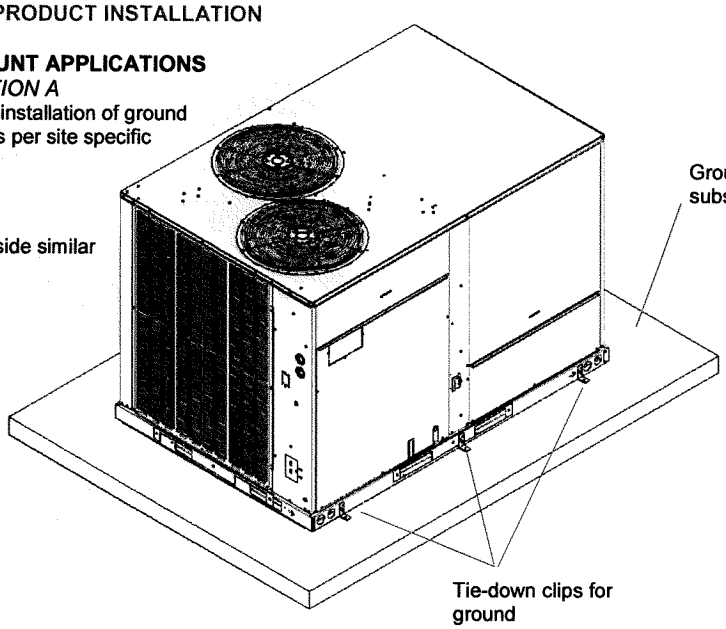

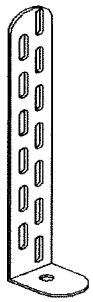

TIE-DOWN CLIP
(GROUND APPLICATION)

Miami Tech CUTD 1" wide ASTM A653 galvanized steel 0.07" thick of varying length (FL19731.2) or *equivalent* for all cabinets tied down to a ground structure; fasten clip to structure using anchor from Anchor Schedule A to Host Structure Table and (3) #12 SAE Gr 2 self-drilling screw to fasten clip to unit base rail. Install in unit with quantities shown ((3) per side). Locate clips at 8.5" min away from the appropriate corner using three clips per side and three clips opposite side in the same configuration.

ANCHOR SCHEDULE TO HOST STRUCTURE

Pressure Lateral (Uplift) (psf)	Concrete	Steel Curb With Clip	Steel Curb Screw
Ground	A	-	-
Up to 81 (64)	-	-	C
Up to 200 (133)	-	B	-

A. – 5/16" ELCO ULTRACON Anchor embedded 2" in 3,515 psi concrete. 3 1/8" from edge minimum & 5" spacing minimum. NOA No. 17-1227.22

B. – #12 TEK Screws, (14) screws per clip, (5) top front side, (4) top back side and (5) bottom front side.

C. – 3/8" SAE Grade 5 Self-Drilling Screw at 6" O.C, (15) per long side and (10) per short side.

STEEL CURB
(ROOF APPLICATION)

Steel curb to be a minimum of 16ga ASTM A653 steel

Curb Clip to be 14ga ASTM A653 steel min (Microhold)

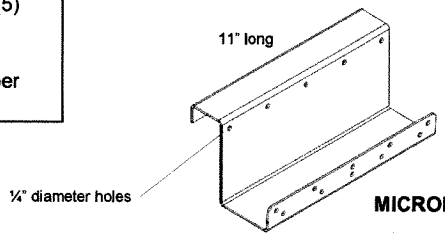

MICROHOLDS

CURB MOUNT APPLICATIONS
CONFIGURATION B
Note: Design & installation of curb to host by others per site specific conditions

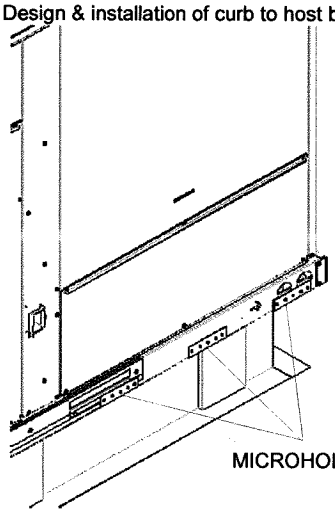

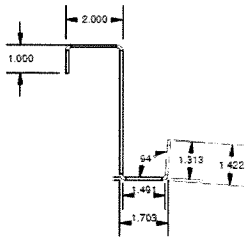

Curb Clip A

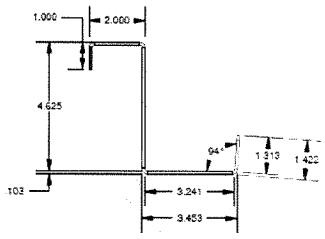

Curb Clip C

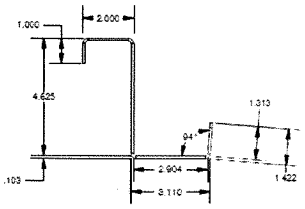

Curb Clip B

IN ALL CONDITIONS IT IS THE RESPONSIBILITY OF THE PERMIT HOLDER TO ENSURE THE HOST STRUCTURE IS CAPABLE OF WITHSTANDING FORCES BY SITE-SPECIFIC DESIGN. NO WARRANTY OF ANY KIND, EXPRESSED OR IMPLIED, IS OFFERED BY RHEEM MANUFACTURING COMPANY, OR ENGINEERING EXPRESS AS TO THE INTEGRITY OF THE HOST STRUCTURE TO CARRY LOADS INCURRED BY THIS UNIT.

CURB CLIP LOCATION

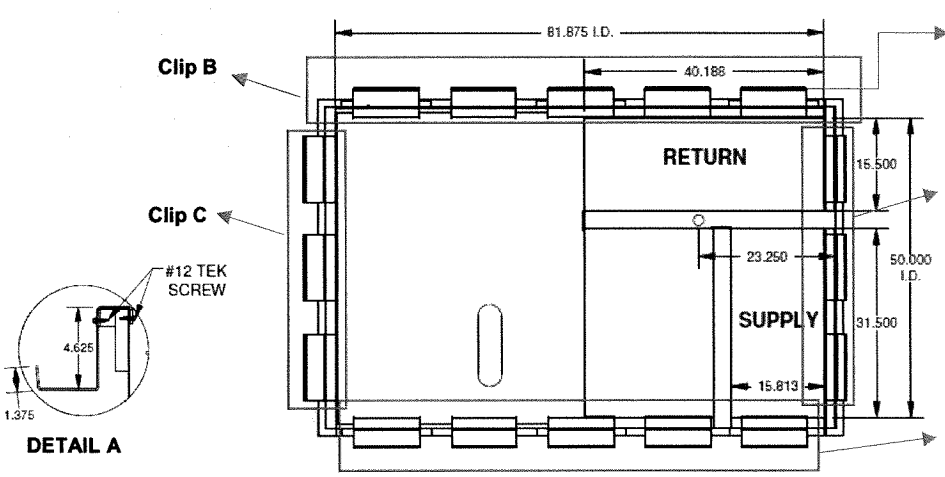

DETAIL A:
Applies for all clips and anchors type B

RGEDZR – 150 Clip Configuration:
(5) clips to each long side, 3" away from corners, spaced at 5.22".

(3) clips to each short side, 3" away from corners. Spaced at 5.50"

See note (3) page (4)

TABLE 1: Clip Curb Schedule		
Unit Model		Number of Clips (Pcs)
RGECZR - 036	RACCZR - 036	4 LS - 2 SS
RGECZR - 048	RACCZR - 048	4 LS - 2 SS
RGECZR - 060	RACCZR - 060	4 LS - 2 SS
RGECZR - 072	RACCZR - 072	4 LS - 2 SS
RGEDZR - 090	RACDZR - 090	5 LS - 3 SS
RGEDZR - 102	RACDZR - 102	5 LS - 3 SS
RGEDZR - 120	RACDZR - 120	5 LS - 3 SS
RGEDZR - 150	RACDZR - 150	5 LS - 3 SS

#Clip Designation (5 LS= 5 clips each Long Side; 3 SS= 3 clips each Short Side) equally spaced

See pressures on page (2) for alternative anchor limitations

ALTERNATIVE ANCHORAGE TO CURB

STEEL CURB WITH SCREW
CONFIGURATION C

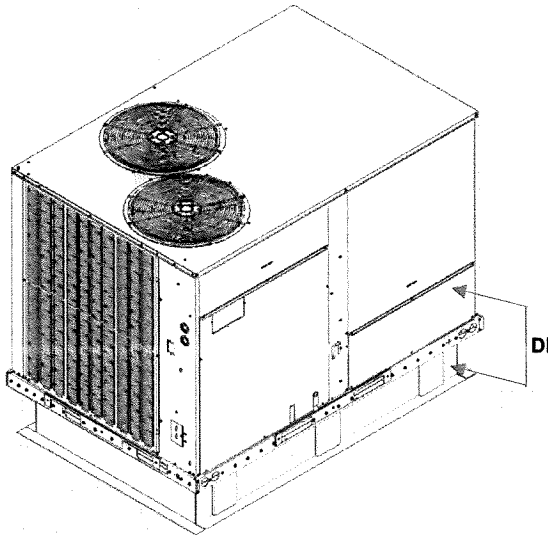

Mechanical Unit Curb Mounted

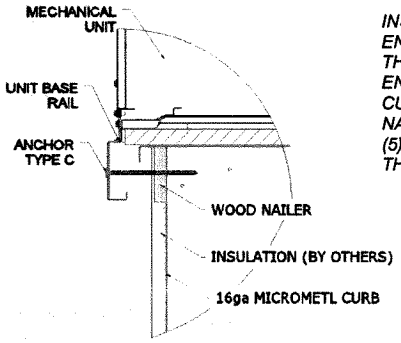

DETAIL B

INSTALLER TO ENSURE THAT THREADED PORTION ENGAGES STEEL CURB BEYOND WOOD NAILER WITH MINIMUM (5) PITCHES PAST THE THREAD PLANE

SECTION 3 MODELS SUMMARY, DIMENSION & NOTES

TABLE 2: Qualified Tested Unit Construction Metal Cabinetry				
Unit Model	Operating Dimensions w/ screw heads			Operating Weight (lbs)
	Width (in)	Length (in)	Height (in)	
RGEDZR - 150	59 1/2	90 1/10	59 7/10	1070

TESTED UNIT LIMITATIONS

1. The unit model listed above was tested and designed as worst-case configurations of model units listed in *Evaluation Model Series Matrix,* remaining unit models are certified by this approval as long as they have identical construction as those listed above and are of equal or lesser dimensions (length, width, height).
2. Dimensions shown are measured from outermost points of unit, including screw heads.
3. Curb clips shall be as close as possible from the shown locations; installers shall verify any interference between clip attachment and internal components of the unit and move clip within the tolerance allowed.

TABLE 3: Evaluation Model Sereis Matrix (Unit Construction Metal Cabinetry)				
Unit Model	Operating Dimensions w/ screw heads			Operating Weight (lbs)
	Width (in)	Length (in)	Height (in)	
RACCZR - 036	46 3/4	78 3/8	41 3/8	453
RACCZR - 048	46 3/4	78 3/8	41 3/8	477
RACCZR - 060	46 3/4	78 3/8	41 3/8	482
RACCZR - 072	46 3/4	78 3/8	41 3/8	689
RACDZR - 090	59 15/32	89 5/16	49 1/4	722
RACDZR - 102	59 15/32	89 5/16	49 1/4	748
RACDZR - 120	59 15/32	89 5/16	49 1/4	777
RACDZR - 150	59 1/2	90 1/10	59 7/10	946

REQUIRED WIND PRESSURES

Design pressures calculated for use with these units shall be determined by others on a job-specific basis in accordance with the governing code. Site specific load requirements for wind load shall be determined in accordance with ASCE 7 and the codes referenced herein by separate engineering certification and shall be less or equal to design pressures capacity values listed herein for any assembly as shown.

TEST REPORTS UTILIZED

Design and certification of the unit cabinetry is approved through *American Test Lab of South Florida*
Report #: 0320.01-18
Tested according ASTM E330-05 and TAS 202-94.

TABLE 3.1: Evaluation Model Sereis Matrix (Unit Construction Metal Cabinetry)				
Unit Model	Operating Dimensions w/ screw heads			Operating Weight (lbs)
	Width (in)	Length (in)	Height (in)	
RGECZR - 036	46 3/4	78 3/8	41 3/8	453
RGECZR - 048	46 3/4	78 3/8	41 3/8	477
RGECZR - 060	46 3/4	78 3/8	41 3/8	482
RGECZR - 072	46 3/4	78 3/8	41 3/8	689
RGEDZR - 090	59 15/32	89 5/16	49 1/4	846
RGEDZR - 102	59 15/32	89 5/16	49 1/4	872
RGEDZR - 120	59 15/32	89 5/16	49 1/4	901

UNIT VIEWS & ELEVATIONS

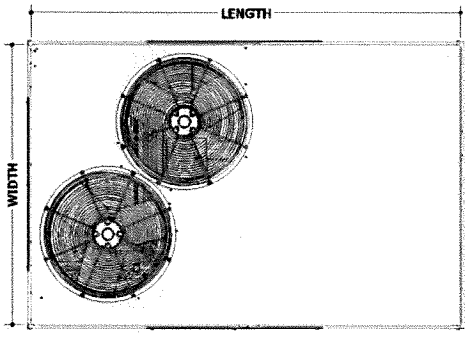

TOP VIEW

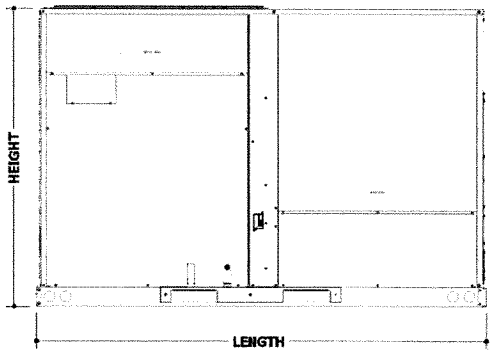

ELEVATION VIEW

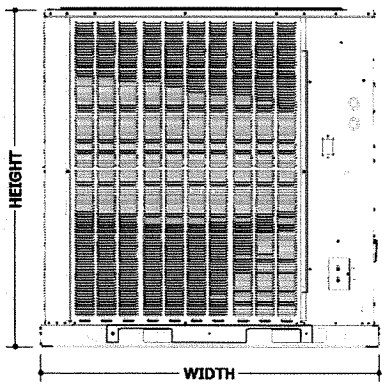

SIDE VIEW

Note: RGEDZR-150 illustration selected for dimensional purposes