MIAMI TECH, INC.

MECHANICAL UNIT STEEL TIE-DOWN CLIP: AT GRADE & ROOF-TOP MOUNTED APPLICATIONS

STEEL TIE-DOWN CLIP

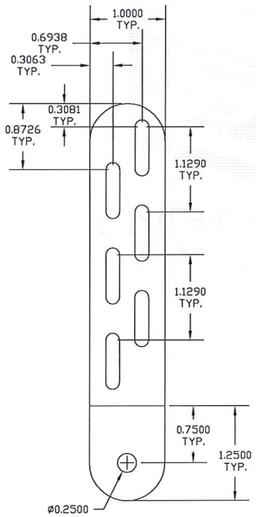

1/1 4" LONG CLIP
N.T.S. FLATTENED

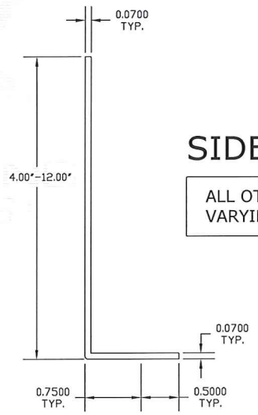

SIDE VIEW TYP.

ALL OTHER CLIPS SIMILAR VARYING LENGTH ONLY

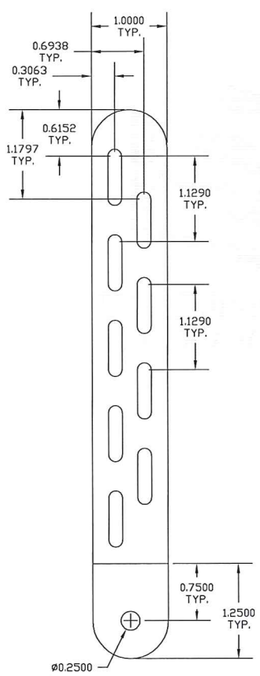

2/1 6" LONG CLIP
N.T.S. FLATTENED

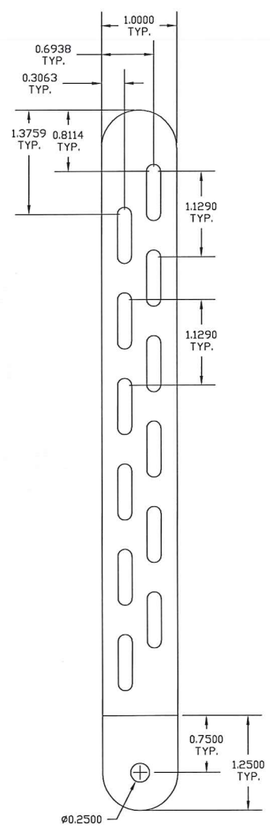

3/1 8" LONG CLIP
N.T.S. FLATTENED

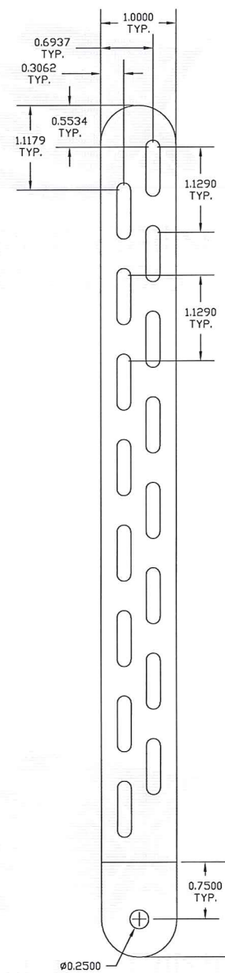

4/1 10" LONG CLIP
N.T.S. FLATTENED

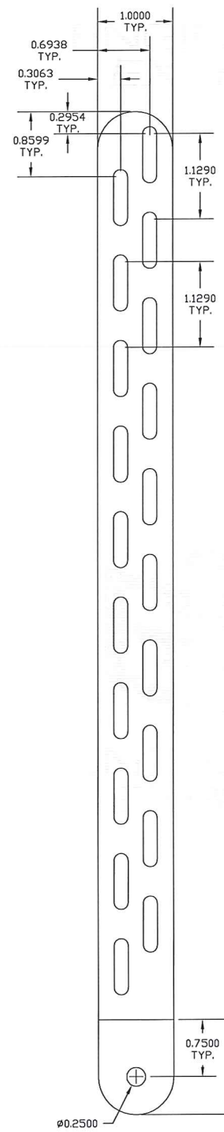

5/1 12" LONG CLIP
N.T.S. FLATTENED

DESIGN NOTES:

1. THIS PRODUCT HAS BEEN DESIGNED IN ACCORDANCE WITH ASCE 7-10 AND THE FLORIDA BUILDING CODE 2014 (5th EDITION) FOR USE WITHIN AND OUTSIDE THE HIGH VELOCITY HURRICANE ZONE AS INDICATED IN THE ACCOMPANYING DESIGN SCHEDULES. THE DESIGN CRITERIA USED TO CALCULATE THE ALLOWABLE ROOF-TOP HEIGHTS CONSIDERS ASCE 7-10 SECTION 29.5.1 FOR ROOF TOP HEIGHTS (H) ≤60 FT AND SECTION 29.5 FOR ROOF TOP HEIGHTS (H)>60 FT & SECTION 29.4.1 FOR INSTALLATIONS AT GRADE. $(GC_f)_{Lateral}$=3.10 WITHIN THE HVHZ, $(GC_f)_{Lateral}$=1.90 OUTSIDE THE HVHZ, $(GC_f)_{Uplift}$=1.5 FOR ALL LOCATIONS (CONCURRENT).
2. ALL OTHER DESIGN VARIABLES ARE IN ACCORDANCE WITH ASCE 7-10 CHAPTERS 26 & 29.
3. THE HEIGHTS LISTED IN THE DESIGN SCHEDULES REPRESENT THE ALLOWABLE HEIGHT OF THE BUILDING.
4. THIS PRODUCT APPROVAL ALLOWS FOR EACH UNIT TO BE INSTALLED ON A MAXIMUM 30" TALL A/C STAND (CERTIFICATION BY OTHERS) ON TOP OF THE HEIGHTS LISTED IN THE DESIGN SCHEDULES.
5. NO 33-1/3% INCREASE IN ALLOWABLE STRESS HAS BEEN USED IN THE DESIGN OF THIS SYSTEM.
6. DESIGN IS BASED ON CLIENT PROVIDED PRODUCT AND DIE SHEETS FROM TEST REPORT PROJECT #15-6206 BY FENESTRATION TESTING LABORATORY, INC.. NO SUBSTITUTIONS WITHOUT WRITTEN APPROVAL BY THIS ENGINEER SHALL BE PERMITTED.
7. STEEL CLIPS SHALL BE ASTM A653 STEEL WITH Fy=33 KSI OR BETTER. STEEL MEMBERS SHALL BE PROTECTED AGAINST CORROSION WITH AN APPROVED COAT OF PAINT, ENAMEL OR OTHER APPROVED PROTECTION. G90-RATED COATING REQUIRED FOR COASTAL INSTALLATIONS.

GENERAL NOTES:

1. THIS PRODUCT HAS BEEN DESIGNED AND SHALL BE FABRICATED IN ACCORDANCE WITH THE REQUIREMENTS OF THE FLORIDA BUILDING CODE & ASCE 7-10. THIS PRODUCT MAY BE USED WITHIN AND OUTSIDE THE HIGH VELOCITY HURRICANE ZONE.
2. MAXIMUM & MINIMUM DIMENSIONS AND MINIMUM WEIGHT OF MECHANICAL UNIT SHALL CONFORM TO SPECIFICATIONS STATED HEREIN. ALL MECHANICAL SPECIFICATIONS (CLEAR SPACE, TONNAGE, ETC.) SHALL BE AS PER MANUFACTURER RECOMMENDATIONS AND ARE THE EXPRESS RESPONSIBILITY OF THE CONTRACTOR.
3. FASTENERS TO BE #10 X ¾" OR GREATER STAINLESS STEEL 410 UNLESS NOTED OTHERWISE. ANCHORS REFERRED TO HEREIN SHALL BE ELCO BRAND, STAINLESS STEEL ONLY, INSTALLED TO 3000 PSI MIN CONCRETE. SEE ANCHOR TO HOST SCHEDULE FOR ANCHOR REQUIREMENTS. ALL FASTENERS SHALL HAVE APPROPRIATE CORROSION PROTECTION TO PREVENT ELECTROLYSIS.
4. ALL CONCRETE SPECIFIED HEREIN IS NOT PART OF THIS CERTIFICATION. AS A MINIMUM, ALL CONCRETE SHALL BE STRUCTURAL CONCRETE 4" MIN. THICK AND SHALL HAVE MINIMUM COMPRESSIVE STRENGTH OF 3000 PSI, UNLESS NOTED OTHERWISE.
5. THE CONTRACTOR IS RESPONSIBLE TO INSULATE ALL MEMBERS FROM DISSIMILAR MATERIALS TO PREVENT ELECTROLYSIS.
6. ELECTRICAL GROUND, WHEN REQUIRED, TO BE DESIGNED & INSTALLED BY OTHERS.
7. THE ADEQUACY OF ANY EXISTING STRUCTURE TO WITHSTAND SUPERIMPOSED LOADS SHALL BE VERIFIED BY THE ONSITE DESIGN PROFESSIONAL AND IS NOT INCLUDED IN THIS CERTIFICATION.EXCEPT AS EXPRESSLY PROVIDED HEREIN, NO ADDITIONAL CERTIFICATIONS OR AFFIRMATIONS ARE INTENDED.
8. THE SYSTEM DETAILED HEREIN IS GENERIC AND DOES NOT PROVIDE INFORMATION FOR A SPECIFIC SITE. FOR SITE CONDITIONS DIFFERENT FROM THE CONDITIONS DETAILED HEREIN, A LICENSED ENGINEER OR REGISTERED ARCHITECT SHALL PREPARE SITE SPECIFIC DOCUMENTS FOR USE IN CONJUNCTION WITH THIS DOCUMENT.
9. WATER-TIGHTNESS OF EXISTING HOST SUBSTRATE SHALL BE THE FULL RESPONSIBILITY OF THE INSTALLING CONTRACTOR. CONTRACTOR SHALL ENSURE THAT ANY REMOVED OR ALTERED WATERPROOFING MEMBRANE IS RESTORED AFTER FABRICATION AND INSTALLATION OF STRUCTURE PROPOSED HEREIN. THIS ENGINEER SHALL NOT BE RESPONSIBLE FOR ANY WATERPROOFING OR LEAKAGE ISSUES WHICH MAY OCCUR AS WATER-TIGHTNESS SHALL BE THE FULL RESPONSIBILITY OF THE INSTALLING CONTRACTOR.
10. FOR AN EXPLANATION OF EXPOSURE AND RISK CATEGORIES THAT ACCOMPANY THE Vult WIND SPEEDS USED IN THIS APPROVAL, SEE SECTION 26.7.3 OF ASCE 7-10.

FRANK L. BENNARDO, P.E.
PE# 0046549
02/11/2016
☐ IF CHECKED, CERTIFYING P.E. APPEARS BELOW
FRANK L. BENNARDO, P.E.
46549
VALID FOR 1 PERMIT ONLY U.N.O.
VALID ONLY WITH ORIGINAL ENGINEER SEAL

ENGINEERING EXPRESS®
CORPORATE OFFICE:
160 SW 12th AVE, SUITE 106
DEERFIELD BEACH, FL 33442
P: (954) 354-0660 F: (954) 354-0443
E: HELLO@ENGINEERINGEXPRESS.COM
ENGINEERINGEXPRESS.COM
CERT OF AUTH #9885

MIAMI TECH, INC.
3611 NW 74TH ST
MIAMI , FL
(305) 693-7054

MIAMI TECH CUTD TIE-DOWN CLIP CERTIFICATIONS

FBC 5TH EDITION (2014) PRODUCT APPROVAL FL#19731

REMARKS	DRWN	CHKD	DATE
INIT ISSUE	LAO	TSB	02/05/16

THIS DOCUMENT IS THE PROPERTY OF ENGINEERING EXPRESS, AND SHALL NOT BE REPRODUCED IN WHOLE OR PART WITHOUT WRITTEN CONSENT OF ENGINEERING EXPRESS. ALTERATIONS, ADDITIONS, OR OTHER MARKINGS TO THIS DOCUMENT ARE NOT PERMITTED AND INVALIDATE OUR CERTIFICATION.

COPYRIGHT ENGINEERING EXPRESS ©

15-2786

SCALE: N.T.S.

02/11/2016 - 12:09pm luiso V:\Projects\15-2786 Miami Tech CUTD Tie-Down Clip Certifications\WP\15-2786 - Final Steel Tiedown CAD.dwg

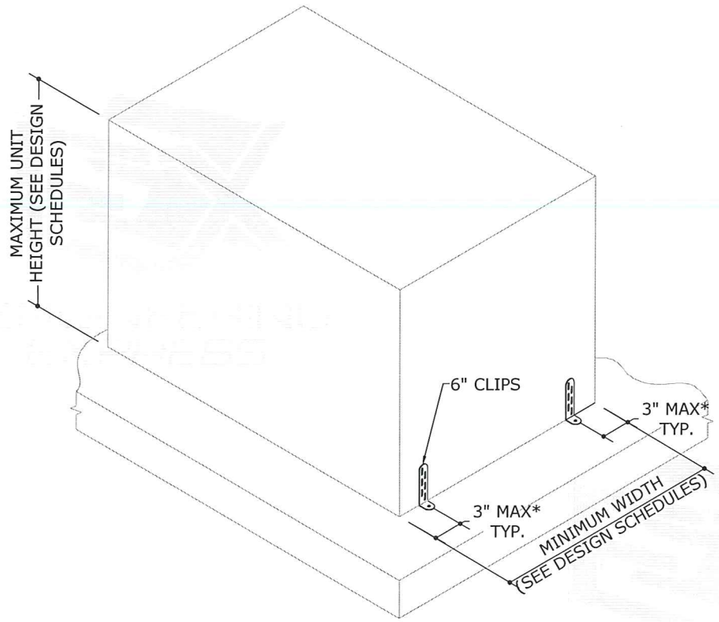

C1 CONNECTION TYPE C1

1"X6" CLIP - UTILIZE (1) AT EACH CORNER FOR A TOTAL OF (4) PER UNIT

NOTE: ALSO APPLICABLE FOR CLIP 4" LONG

*NOTE: SEE ANCHOR TO HOST SCHEDULE FOR ALL EDGE DISTANCE TO ANCHOR SPACING LIMITATIONS. SEE PAGE 3.

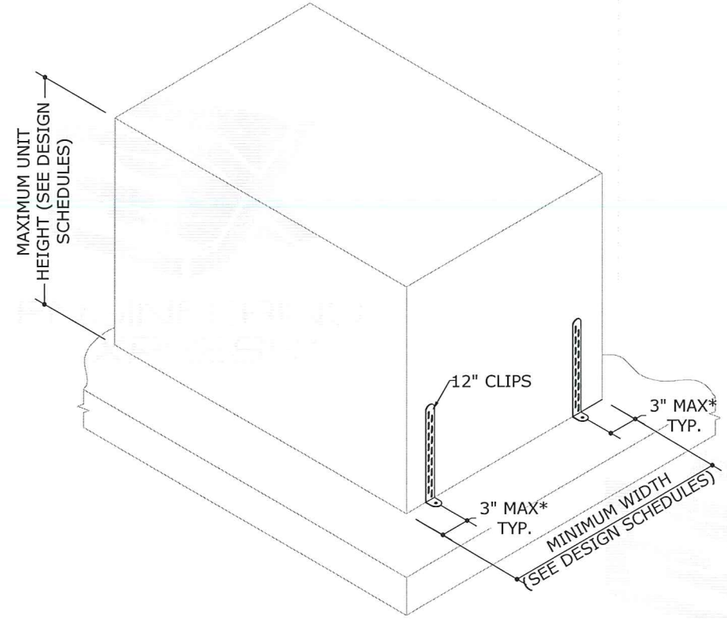

C3 CONNECTION TYPE C3

1"X12" CLIP - UTILIZE (1) AT EACH CORNER FOR A TOTAL OF (4) PER UNIT

NOTE: ALSO APPLICABLE FOR CLIPS 8" & 10" LONG

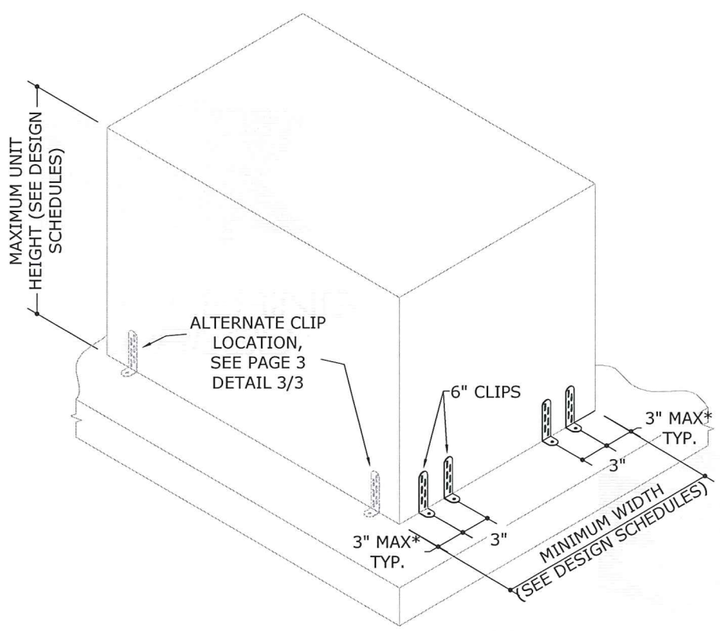

C2 CONNECTION TYPE C2

1"X6" CLIP - UTILIZE (2) AT EACH CORNER FOR A TOTAL OF (8) PER UNIT

NOTE: ALSO APPLICABLE FOR CLIP 4" LONG

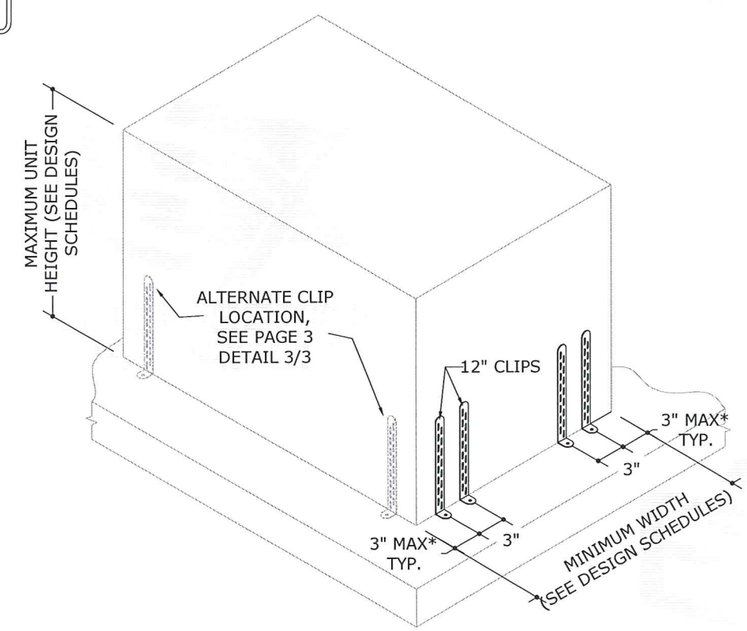

C4 CONNECTION TYPE C4

1"X12" CLIP - UTILIZE (2) AT EACH CORNER FOR A TOTAL OF (8) PER UNIT

NOTE: ALSO APPLICABLE FOR CLIPS 8" & 10" LONG

STEEL TIE-DOWN CLIP

FRANK L. BENNARDO, P.E.
PE# 0046549

02/11/2016

THE DOCS. CERTIFYING P.E. APPEARS BELOW
FRANK L. BENNARDO, P.E.
46549

VALID FOR 1 PERMIT ONLY U.N.O.
VALID ONLY WITH ORIGINAL ENGINEER SEAL

FRANK L. BENNARDO LICENSE No 46549 STATE OF FLORIDA PROFESSIONAL ENGINEER

ENGINEERING EXPRESS®
CORPORATE OFFICE:
160 SW 12th AVE, SUITE 106
DEERFIELD BEACH, FL 33442
P: (954) 354-0660 F: (954) 354-0443
E: HELLO@ENGINEERINGEXPRESS.COM
ENGINEERINGEXPRESS.COM
CERT OF AUTH #9885

MIAMI TECH, INC.
3611 NW 74TH ST
MIAMI , FL
(305) 693-7054

MIAMI TECH CUTD TIE-DOWN CLIP CERTIFICATIONS

FBC 5TH EDITION (2014) PRODUCT APPROVAL FL#19731

REMARKS	DRWN	CHK'D	DATE
INIT ISSUE	LAO	TSB	02/05/16
-	-	-	-
-	-	-	-
-	-	-	-
-	-	-	-

THIS DOCUMENT IS THE PROPERTY OF ENGINEERING EXPRESS, AND SHALL NOT BE REPRODUCED IN WHOLE OR PART WITHOUT WRITTEN CONSENT OF ENGINEERING EXPRESS. ALTERATIONS, ADDITIONS, OR OTHER MARKINGS TO THIS DOCUMENT ARE NOT PERMITTED AND INVALIDATE OUR CERTIFICATION.

COPYRIGHT ENGINEERING EXPRESS ©

15-2786

SCALE: N.T.S.

02/11/2016 - 12:09pm luiso V:\Projects\15-2786 Miami Tech CUTD Tie-Down Clip Certifications\WP\15-2786 - Final Steel Tiedown CAD.dwg

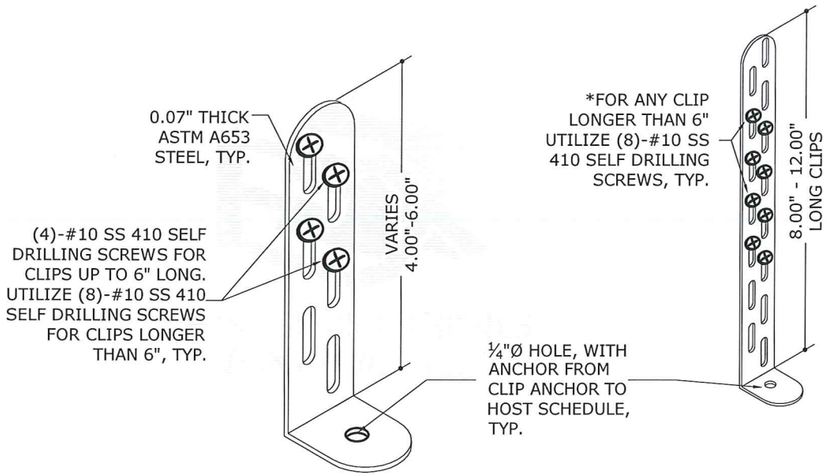

1/3 1" CLIP ISOMETRIC DETAIL

N.T.S. ISOMETRIC

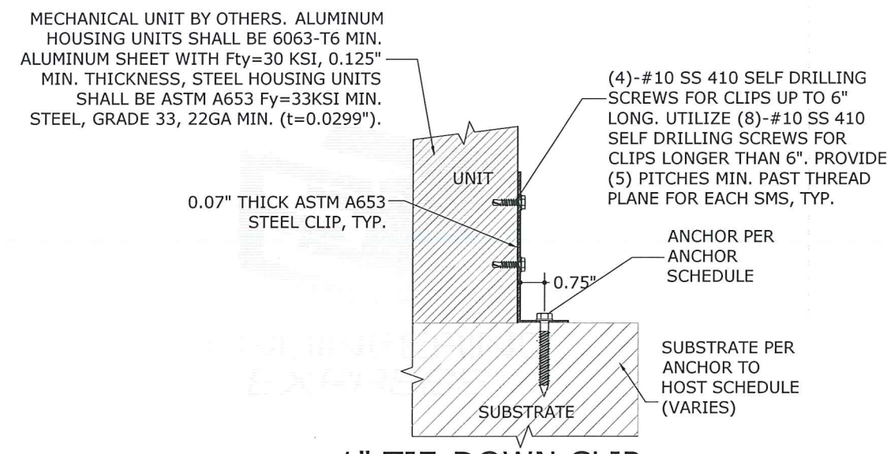

2/3 1" TIE-DOWN CLIP ANCHOR DETAIL

3" = 1'-0" DETAIL

CLIP IS DESIGNED FOR FULL CONTACT WITH THE BASE OF EACH MECHANICAL UNIT, TYP.

ANCHOR TO HOST SCHEDULE:

SUBSTRATE	DESCRIPTION
CONCRETE: (4" THICK MIN, 3000 PSI MIN.)	(1)-1/4"Ø STAINLESS STEEL 410 ELCO ULTRACON, 1¾" FULL EMBED TO CONCRETE, 2½" MIN. EDGE DISTANCE, 3" MIN. SPACING TO ANY ADJACENT ANCHOR.
ALUMINUM: (0.125" MIN. THICK, 6061-T6 MIN. ALUMINUM)	(1)-#14 SAE STAINLESS STEEL BOLT 410 WITH NUT AND WASHER TOP & BOTTOM SS OD 1", ½" MINIMUM EDGE DISTANCE TO METAL EDGE
STEEL: (0.125" MIN. THICK, 50 KSI MIN. STEEL)	(1)-#14 SAE STAINLESS STEEL BOLT 410 WITH NUT AND WASHER TOP & BOTTOM SS OD 1", ½" MINIMUM EDGE DISTANCE TO METAL EDGE

1. EMBEDMENT AND EDGE DISTANCE EXCLUDES FINISHES, IF APPLICABLE.
2. ENSURE MINIMUM EDGE DISTANCE AS NOTED IN ANCHOR SCHEDULE.
3. ENSURE MINIMUM SPACING TO ANY ADJACENT ANCHORS.
4. SEE DETAILS ON SHEET 3 FOR ANCHORS ATTACHING TO MECHANICAL UNIT.
5. PROTECT ALL METALS FROM DISSIMILAR METALS GENERAL NOTE #5

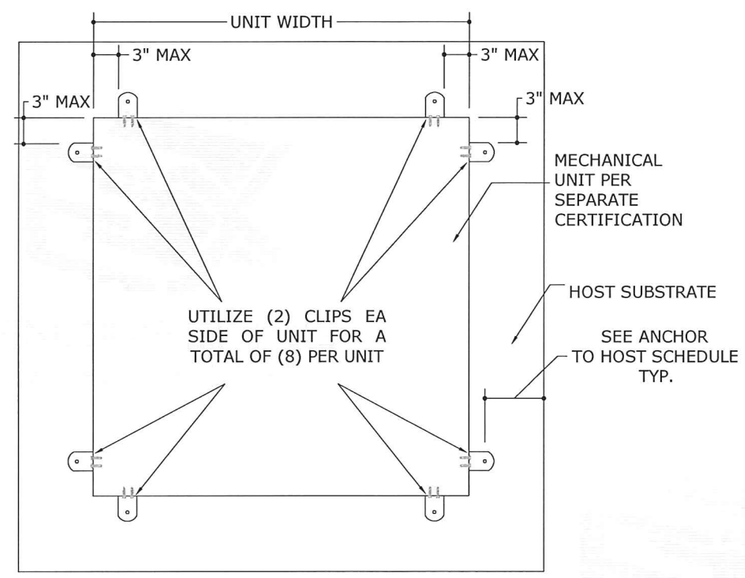

3/3 ALTERNATE (8) CLIP DETAIL

N.T.S. PLAN VIEW

THIS DETAIL MAY BE USED AS AN ALTERNATE GEOMETRIC PATTERN FOR ALL CONNECTION TYPES THAT UTILIZE (2) CLIPS AT EACH CORNER FOR A TOTAL OF (8) CLIPS PER UNIT.

STEEL TIE-DOWN CLIP

FRANK L. BENNARDO, P.E.
RE# 0046549

02/11/2016

IF COVER CERTIFYING P.E. APPEARS BELOW
FRANK L. BENNARDO, P.E.
46549
VALID FOR 1 PERMIT ONLY U.N.O.
VALID ONLY WITH ORIGINAL ENGINEER SEAL

ENGINEERING EXPRESS®
CORPORATE OFFICE:
160 SW 12th AVE, SUITE 106
DEERFIELD BEACH, FL 33442
P: (954) 354-0660 F: (954) 354-0443
E: HELLO@ENGINEERINGEXPRESS.COM
ENGINEERINGEXPRESS.COM
CERT OF AUTH #9885

MIAMI TECH, INC.
3611 NW 74TH ST
MIAMI , FL
(305) 693-7054

MIAMI TECH CUTD TIE-DOWN CLIP CERTIFICATIONS

FBC 5TH EDITION (2014) PRODUCT APPROVAL FL#19731

REMARKS	DRWN	CHKD	DATE
INIT ISSUE	LAO	TSB	02/05/16
-	-	-	-
-	-	-	-
-	-	-	-
-	-	-	-

THIS DOCUMENT IS THE PROPERTY OF ENGINEERING EXPRESS, AND SHALL NOT BE REPRODUCED IN WHOLE OR PART WITHOUT WRITTEN CONSENT OF ENGINEERING EXPRESS. ALTERATIONS, ADDITIONS, OR OTHER MARKINGS TO THIS DOCUMENT ARE NOT PERMITTED AND INVALIDATE OUR CERTIFICATION.

COPYRIGHT ENGINEERING EXPRESS ©

15-2786

SCALE: N.T.S.

02/11/2016 - 12:09pm luiso V:\Projects\15-2786 Miami Tech CUTD Tie-Down Clip Certifications\WP\15-2786 - Final Steel Tiedown CAD.dwg

TABLE 1 PERMISSIBLE INSTALLATION HEIGHTS: Vult=175 MPH, EXPOSURE C

(FOR USE WITH A RISK CATEGORY II STRUCTURE IN THE HIGH VELOCITY HURRICANE ZONE (HVHZ)*)
RISK CATEGORY II IS PER ASCE 7-10

MAXIMUM SURFACE AREA OF UNIT'S LARGEST FACE	UNIT HEIGHT	UNIT WIDTH	ALLOWABLE ROOF-TOP HEIGHT (H) TIE-DOWN CONFIGURATION TYPE C1	C2	C3	C4
6 FT²	29" MAX	15" MIN	AT GRADE	H ≤ 80 FT	AT GRADE	H ≤ 120 FT
9 FT²	36" MAX	27" MIN	AT GRADE	H ≤ 30 FT	AT GRADE	H ≤ 40 FT
4 FT²	48" MAX	36" MIN	H ≤ 15 FT	H ≤ 200 FT	H ≤ 30 FT	H ≤ 200 FT
6 FT²			AT GRADE	H ≤ 200 FT	AT GRADE	H ≤ 200 FT
9 FT²			AT GRADE	H ≤ 40 FT	AT GRADE	H ≤ 60 FT
12 FT²			N/A	AT GRADE	N/A	AT GRADE
16 FT²			N/A	AT GRADE	N/A	AT GRADE
20 FT²	60" MAX	48" MIN	N/A	AT GRADE	N/A	AT GRADE
25 FT²			N/A	AT GRADE	N/A	AT GRADE
30 FT²			N/A	N/A	N/A	AT GRADE
36 FT²			N/A	N/A	N/A	N/A

*THIS TABLE IS PERMISSIBLE TO BE USED WITHIN THE **HVHZ** WHICH CONTAINS BROWARD AND MIAMI-DADE COUNTIES. CHECK WITH LOCAL AUTHORITY HAVING JURISDICTION FOR THE APPLICABILITY OF THIS TABLE WITHIN CERTAIN FLORIDA COUNTIES.

TABLE 2 PERMISSIBLE INSTALLATION HEIGHTS: Vult=175 MPH, EXPOSURE D

(FOR USE WITH A RISK CATEGORY II STRUCTURE IN THE HIGH VELOCITY HURRICANE ZONE (HVHZ)*)
RISK CATEGORY II IS PER ASCE 7-10

MAXIMUM SURFACE AREA OF UNIT'S LARGEST FACE	UNIT HEIGHT	UNIT WIDTH	ALLOWABLE ROOF-TOP HEIGHT (H) TIE-DOWN CONFIGURATION TYPE C1	C2	C3	C4
6 FT²	29" MAX	15" MIN	AT GRADE	H ≤ 30 FT	AT GRADE	H ≤ 60 FT
9 FT²	36" MAX	27" MIN	N/A	AT GRADE	AT GRADE	H ≤ 15 FT
4 FT²	48" MAX	36" MIN	AT GRADE	H ≤ 200 FT	AT GRADE	H ≤ 200 FT
6 FT²			AT GRADE	H ≤ 180 FT	AT GRADE	H ≤ 200 FT
9 FT²			AT GRADE	AT GRADE	AT GRADE	H ≤ 15 FT
12 FT²			N/A	AT GRADE	N/A	AT GRADE
16 FT²			N/A	AT GRADE	N/A	AT GRADE
20 FT²	60" MAX	48" MIN	N/A	AT GRADE	N/A	AT GRADE
25 FT²			N/A	N/A	N/A	AT GRADE
30 FT²			N/A	N/A	N/A	N/A
36 FT²			N/A	N/A	N/A	N/A

*THIS TABLE IS PERMISSIBLE TO BE USED WITHIN THE **HVHZ** WHICH CONTAINS BROWARD AND MIAMI-DADE COUNTIES. CHECK WITH LOCAL AUTHORITY HAVING JURISDICTION FOR THE APPLICABILITY OF THIS TABLE WITHIN CERTAIN FLORIDA COUNTIES.

TABLE 3 PERMISSIBLE INSTALLATION HEIGHTS: Vult=170 MPH, EXPOSURE C

(FOR USE WITH A RISK CATEGORY II STRUCTURE**)
RISK CATEGORY II IS PER ASCE 7-10

MAX SURFACE AREA OF UNIT'S LARGEST FACE	UNIT HEIGHT	UNIT WIDTH	ALLOWABLE ROOF-TOP HEIGHT (H) TIE-DOWN CONFIGURATION TYPE C1	C2	C3	C4
6 FT²	29" MAX	15" MIN	AT GRADE	H ≤ 200 FT	AT GRADE 60 FT < H ≤ 100 FT	H ≤ 200 FT
9 FT²	36" MAX	27" MIN	AT GRADE	H ≤ 200 FT	AT GRADE	H ≤ 200 FT
4 FT²	48" MAX	36" MIN	H ≤ 200 FT	H ≤ 200 FT	H ≤ 200 FT	H ≤ 200 FT
6 FT²			H ≤ 30 FT 60 FT < H ≤ 200 FT	H ≤ 200 FT	H ≤ 40 FT 60 FT < H ≤ 200 FT	H ≤ 200 FT
9 FT²			AT GRADE	H ≤ 200 FT	AT GRADE 60 FT < H ≤ 80 FT	H ≤ 200 FT
12 FT²			N/A	H ≤ 200 FT	N/A	H ≤ 200 FT
16 FT²			N/A	H ≤ 15 FT 60 FT < H ≤ 200 FT	N/A	H ≤ 30 FT 60 FT < H ≤ 200 FT
20 FT²	60" MAX	48" MIN	N/A	AT GRADE 60 FT < H ≤ 120 FT	N/A	AT GRADE 60 FT < H ≤ 180 FT
25 FT²			N/A	AT GRADE	N/A	AT GRADE
30 FT²			N/A	N/A	N/A	AT GRADE
36 FT²			N/A	N/A	N/A	N/A

LEGEND:

H ≤ 15 FT
60 FT < H ≤ 200 FT

IN THIS EXAMPLE, THE PRODUCT CAN BE INSTALLED ON A BUILDING ROOF HEIGHT (H) LESS THAN OR EQUAL TO 15 FEET, OR ON A BUILDING ROOF HEIGHT THAT IS BETWEEN 60 TO 200 FEET (FT) ABOVE GRADE. SEE DESIGN NOTE 1

TABLE 4 PERMISSIBLE INSTALLATION HEIGHTS: Vult=170 MPH, EXPOSURE D

(FOR USE WITH A RISK CATEGORY II STRUCTURE**)
RISK CATEGORY II IS PER ASCE 7-10

MAX SURFACE AREA OF UNIT'S LARGEST FACE	UNIT HEIGHT	UNIT WIDTH	ALLOWABLE ROOF-TOP HEIGHT (H) TIE-DOWN CONFIGURATION TYPE C1	C2	C3	C4
6 FT²	29" MAX	15" MIN	AT GRADE	H ≤ 200 FT	AT GRADE	H ≤ 200 FT
9 FT²	36" MAX	27" MIN	N/A	H ≤ 200 FT	AT GRADE	H ≤ 200 FT
4 FT²	48" MAX	36" MIN	H ≤ 200 FT	H ≤ 200 FT	H ≤ 200 FT	H ≤ 200 FT
6 FT²			AT GRADE 60 FT < H ≤ 200 FT	H ≤ 200 FT	H ≤ 15 FT 60 FT < H ≤ 200 FT	H ≤ 200 FT
9 FT²			N/A	H ≤ 200 FT	AT GRADE	H ≤ 200 FT
12 FT²			N/A	H ≤ 40 FT 60 FT < H ≤ 200 FT	N/A	H ≤ 200 FT
16 FT²			N/A	AT GRADE 60 FT < H ≤ 180 FT	N/A	AT GRADE 60 FT < H ≤ 200 FT
20 FT²	60" MAX	48" MIN	N/A	AT GRADE	N/A	AT GRADE 60 FT < H ≤ 100 FT
25 FT²			N/A	N/A	N/A	N/A
30 FT²			N/A	N/A	N/A	N/A
36 FT²			N/A	N/A	N/A	N/A

**AS AN EXAMPLE, THESE TABLES ARE PERMISSIBLE TO BE USED WITHIN PALM BEACH COUNTY. CHECK WITH LOCAL AUTHORITY HAVING JURISDICTION FOR THE APPLICABILITY OF THESE TABLES WITHIN CERTAIN FLORIDA COUNTIES.

STEEL TIE-DOWN CLIP

FRANK L. BENNARDO, P.E.
PE# 0046549
02/11/2016
IF CHECKED, CERTIFYING P.E. APPEARS BELOW
FRANK L. BENNARDO, P.E.
46549
VALID FOR 1 PERMIT ONLY U.N.O.
VALID ONLY WITH ORIGINAL ENGINEER SEAL
ENGINEERING EXPRESS®
CORPORATE OFFICE:
160 SW 12th AVE, SUITE 106
DEERFIELD BEACH, FL 33442
P: (954) 354-0660 F: (954) 354-0443
E: HELLO@ENGINEERINGEXPRESS.COM
ENGINEERINGEXPRESS.COM
CERT OF AUTH #9885

MIAMI TECH, INC.
3611 NW 74TH ST
MIAMI , FL
(305) 693-7054

MIAMI TECH CUTD TIE-DOWN CLIP CERTIFICATIONS

FBC 5TH EDITION (2014) PRODUCT APPROVAL FL#19731

REMARKS	DRWN	CHKD	DATE
INIT ISSUE	LAO	TSB	02/05/16
-	-	-	-
-	-	-	-
-	-	-	-
-	-	-	-

THIS DOCUMENT IS THE PROPERTY OF ENGINEERING EXPRESS, AND SHALL NOT BE REPRODUCED IN WHOLE OR PART WITHOUT WRITTEN CONSENT OF ENGINEERING EXPRESS. ALTERATIONS, ADDITIONS, OR OTHER MARKINGS TO THIS DOCUMENT ARE NOT PERMITTED AND INVALIDATE OUR CERTIFICATION.

COPYRIGHT ENGINEERING EXPRESS ©

15-2786

SCALE: N.T.S.

02/11/2016 - 12:09pm luiso V:\Projects\15-2786 Miami Tech CUTD Tie-Down Clip Certifications\WP\15-2786 - Final Steel Tiedown CAD.dwg

TABLE 5 PERMISSIBLE INSTALLATION HEIGHTS: Vult=140 MPH, EXPOSURE B

(FOR USE WITH A RISK CATEGORY II STRUCTURE***)
RISK CATEGORY II IS PER ASCE 7-10

MAXIMUM SURFACE AREA OF UNIT'S LARGEST FACE	UNIT HEIGHT	UNIT WIDTH	ALLOWABLE ROOF-TOP HEIGHT (H) / TIE-DOWN CONFIGURATION TYPE			
			C1	C2	C3	C4
6 FT²	29" MAX	15" MIN	H ≤ 200 FT	H ≤ 200 FT	H ≤ 200 FT	H ≤ 200 FT
9 FT²	36" MAX	27" MIN	H ≤ 200 FT	H ≤ 200 FT	H ≤ 200 FT	H ≤ 200 FT
4 FT²	48" MAX	36" MIN	H ≤ 200 FT	H ≤ 200 FT	H ≤ 200 FT	H ≤ 200 FT
6 FT²			H ≤ 200 FT	H ≤ 200 FT	H ≤ 200 FT	H ≤ 200 FT
9 FT²			H ≤ 200 FT	H ≤ 200 FT	H ≤ 200 FT	H ≤ 200 FT
12 FT²			H ≤ 200 FT	H ≤ 200 FT	H ≤ 40 FT 60 FT < H ≤ 200 FT	H ≤ 200 FT
16 FT²			AT GRADE 60 FT < H ≤ 80 FT	H ≤ 200 FT	H ≤ 15 FT 60 FT < H ≤ 100 FT	H ≤ 200 FT
20 FT²	60" MAX	48" MIN	AT GRADE	H ≤ 200 FT	AT GRADE	H ≤ 200 FT
25 FT²			N/A	H ≤ 200 FT	AT GRADE	H ≤ 200 FT
30 FT²			N/A	H ≤ 30 FT 60 FT < H ≤ 200 FT	N/A	H ≤ 40 FT 60 FT < H ≤ 200 FT
36 FT²			N/A	H ≤ 15 FT 60 FT < H ≤ 120 FT	N/A	H ≤ 15 FT 60 FT < H ≤ 180 FT

TABLE 6 PERMISSIBLE INSTALLATION HEIGHTS: Vult=140 MPH, EXPOSURE C

(FOR USE WITH A RISK CATEGORY II STRUCTURE***)
RISK CATEGORY II IS PER ASCE 7-10

MAXIMUM SURFACE AREA OF UNIT'S LARGEST FACE	UNIT HEIGHT	UNIT WIDTH	ALLOWABLE ROOF-TOP HEIGHT (H) / TIE-DOWN CONFIGURATION TYPE			
			C1	C2	C3	C4
6 FT²	29" MAX	15" MIN	H ≤ 30 FT 60 FT < H ≤ 200 FT	H ≤ 200 FT	H ≤ 40 FT 60 FT < H ≤ 200 FT	H ≤ 200 FT
9 FT²	36" MAX	27" MIN	H ≤ 15 FT 60 FT < H ≤ 200 FT	H ≤ 200 FT	H ≤ 30 FT 60 FT < H ≤ 200 FT	H ≤ 200 FT
4 FT²	48" MAX	36" MIN	H ≤ 200 FT	H ≤ 200 FT	H ≤ 60 FT 60 FT < H ≤ 200 FT	H ≤ 200 FT
6 FT²			H ≤ 200 FT	H ≤ 200 FT	H ≤ 60 FT 60 FT < H ≤ 200 FT	H ≤ 200 FT
9 FT²			H ≤ 15 FT 60 FT < H ≤ 200 FT	H ≤ 200 FT	H ≤ 40 FT 60 FT < H ≤ 200 FT	H ≤ 200 FT
12 FT²			AT GRADE 60 FT < H ≤ 80 FT	H ≤ 200 FT	AT GRADE 60 FT < H ≤ 140 FT	H ≤ 200 FT
16 FT²			N/A	H ≤ 200 FT	AT GRADE	H ≤ 200 FT
20 FT²	60" MAX	48" MIN	N/A	H ≤ 40 FT 60 FT < H ≤ 200 FT	N/A	H ≤ 200 FT
25 FT²			N/A	H ≤ 15 FT 60 FT < H ≤ 200 FT	N/A	H ≤ 30 FT 60 FT < H ≤ 200 FT
30 FT²			N/A	AT GRADE 60 FT < H ≤ 100 FT	N/A	AT GRADE 60 FT < H ≤ 160 FT
36 FT²			N/A	AT GRADE	N/A	AT GRADE

TABLE 7 PERMISSIBLE INSTALLATION HEIGHTS: Vult=140 MPH, EXPOSURE D

(FOR USE WITH A RISK CATEGORY II STRUCTURE***)
RISK CATEGORY II IS PER ASCE 7-10

MAXIMUM SURFACE AREA OF UNIT'S LARGEST FACE	UNIT HEIGHT	UNIT WIDTH	ALLOWABLE ROOF-TOP HEIGHT (H) / TIE-DOWN CONFIGURATION TYPE			
			C1	C2	C3	C4
6 FT²	29" MAX	15" MIN	AT GRADE 60 FT < H ≤ 200 FT	H ≤ 200 FT	H ≤ 15 FT 60 FT < H ≤ 200 FT	H ≤ 200 FT
9 FT²	36" MAX	27" MIN	AT GRADE 60 FT < H ≤ 200 FT	H ≤ 200 FT	AT GRADE 60 FT < H ≤ 200 FT	H ≤ 200 FT
4 FT²	48" MAX	36" MIN	H ≤ 200 FT	H ≤ 200 FT	H ≤ 200 FT	H ≤ 200 FT
6 FT²			H ≤ 200 FT	H ≤ 200 FT	H ≤ 200 FT	H ≤ 200 FT
9 FT²			AT GRADE 60 FT < H ≤ 200 FT	H ≤ 200 FT	H ≤ 15 FT 60 FT < H ≤ 200 FT	H ≤ 200 FT
12 FT²			AT GRADE	H ≤ 200 FT	AT GRADE	H ≤ 200 FT
16 FT²			N/A	H ≤ 200 FT	N/A	H ≤ 200 FT
20 FT²	60" MAX	48" MIN	N/A	H ≤ 15 FT 60 FT < H ≤ 200 FT	N/A	H ≤ 40 FT 60 FT < H ≤ 200 FT
25 FT²			N/A	AT GRADE 60 FT < H ≤ 160 FT	N/A	AT GRADE 60 FT < H ≤ 200 FT
30 FT²			N/A	AT GRADE	N/A	AT GRADE 60 FT < H ≤ 80 FT
36 FT²			N/A	N/A	N/A	AT GRADE

LEGEND:

H ≤ 15 FT
60 FT < H ≤ 200 FT

IN THIS EXAMPLE, THE PRODUCT CAN BE INSTALLED ON A BUILDING ROOF HEIGHT LESS (H) THAN OR EQUAL TO 15 FEET, OR ON A BUILDING ROOF HEIGHT THAT IS BETWEEN 60 TO 200 FEET (FT) ABOVE GRADE. SEE DESIGN NOTE 1

***AS AN EXAMPLE, THESE TABLES ARE PERMISSIBLE TO BE USED WITHIN BREVARD COUNTY. CHECK WITH LOCAL AUTHORITY HAVING JURISDICTION FOR THE APPLICABILITY OF THIS TABLE WITHIN CERTAIN FLORIDA COUNTIES.

STEEL TIE-DOWN CLIP

FRANK L. BENNARDO, P.E.
PE# 0046549
02/11/2016
☐ IF CHECKED, CERTIFYING P.E. APPEARS BELOW
FRANK L. BENNARDO, P.E.
46549
VALID FOR 1 PERMIT ONLY U.N.O.
VALID ONLY WITH ORIGINAL ENGINEER SEAL

ENGINEERING EXPRESS®
CORPORATE OFFICE:
160 SW 12th AVE, SUITE 106
DEERFIELD BEACH, FL 33442
P: (954) 354-0660 F: (954) 354-0443
E: HELLO@ENGINEERINGEXPRESS.COM
ENGINEERINGEXPRESS.COM
CERT OF AUTH #9885

MIAMI TECH, INC.
3611 NW 74TH ST
MIAMI , FL
(305) 693-7054

MIAMI TECH CUTD TIE-DOWN CLIP CERTIFICATIONS

FBC 5TH EDITION (2014) PRODUCT APPROVAL FL#19731

REMARKS	DRWN	CHKD	DATE
INIT ISSUE	LAO	TSB	02/05/16
-	-	-	-
-	-	-	-
-	-	-	-
-	-	-	-

THIS DOCUMENT IS THE PROPERTY OF ENGINEERING EXPRESS, AND SHALL NOT BE REPRODUCED IN WHOLE OR PART WITHOUT WRITTEN CONSENT OF ENGINEERING EXPRESS. ALTERATIONS, ADDITIONS, OR OTHER MARKINGS TO THIS DOCUMENT ARE NOT PERMITTED AND INVALIDATE OUR CERTIFICATION.

COPYRIGHT ENGINEERING EXPRESS ©

15-2786

SCALE: N.T.S.

02/11/2016 - 12:09pm luiso V:\Projects\15-2786 Miami Tech CUTD Tie-Down Clip Certifications\WP\15-2786 - Final Steel Tiedown CAD.dwg

miami tech inc.

Installation Instructions for Ground / Concrete Slab Mount Tie-Down Kits

Kit Numbers

FL14CUTD6KG (Steel Tie Down Clips)
FL14CUTD8KG (Steel Tie Down Clips)
FL14CUTDA6KG (Aluminum Tie Down Clips)
FL14CUTDA8KG (Aluminum Tie Down Clips)

1) Carefully review the included installation drawings before proceeding to anchor the condensing unit. If installing steel tie-down clips, please refer to the Mechanical Unit Steel Tie-Down Clip engineering drawing dated 2/11/2016. If installing aluminum tie-down clips, please refer to the Mechanical Unit Aluminum Tie-Down Clip engineering drawing dated 2/11/2016. The tie-down kits must be installed per the included installation drawings and the following instructions to maintain certification of the tie-down method.

2) Center the condensing unit on the concrete slab built with the minimum dimensions as illustrated in the included installation drawings. Use the appropriate drawing for the condensing unit being installed.

3) Using the bottom part of the tie down clip to rest on the concrete slab, attach the four (4) tie-down clips included in the kit with the appropriate quantity of #10 stainless steel 410 self-drilling screws. For 6” tie-down clips, use four (4) #10 stainless steel 410 self-drilling screws per each tie-down clip. For 8” tie-down clips, use eight (8) #10 stainless steel 410 self-drilling screws per each tie-down clip.

4) Drill a 2” deep pilot hole for the ¼” stainless steel 410 Elco Ultracon screw through the hole of the bottom part of the tie down clip. These holes must be at least 2.5” inches from the edge of the concrete slab.

5) Secure the tie down clip to the concrete slab with the included ¼” stainless steel 410 Elco Ultracon screw per each tie-down clip.